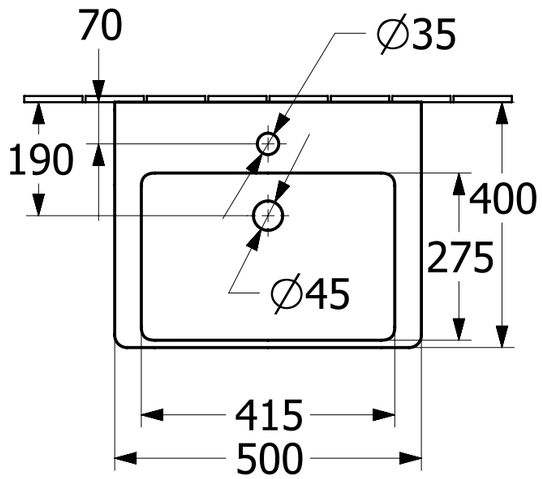

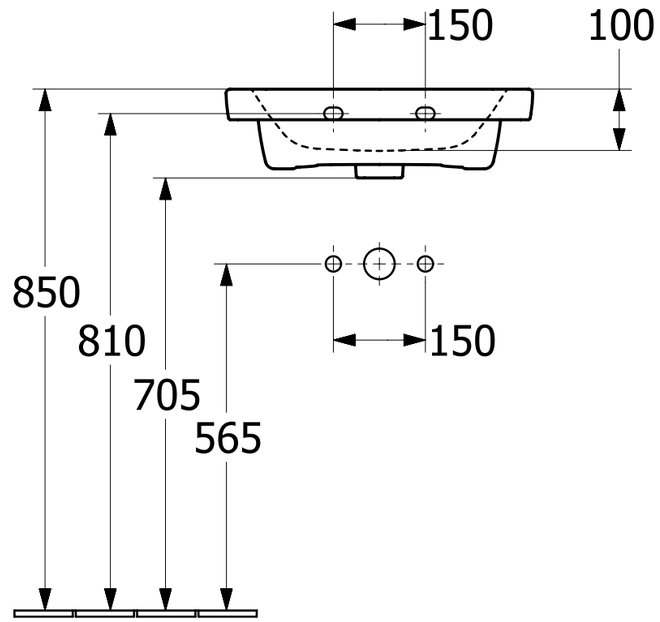

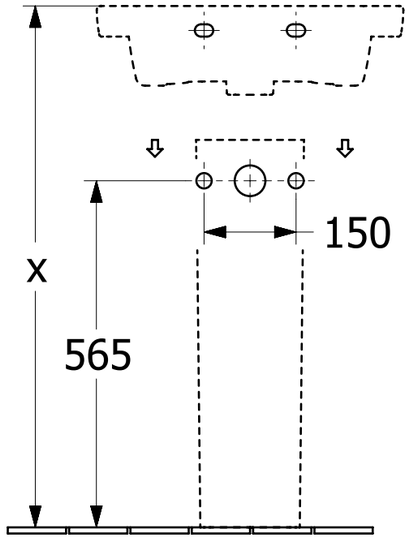

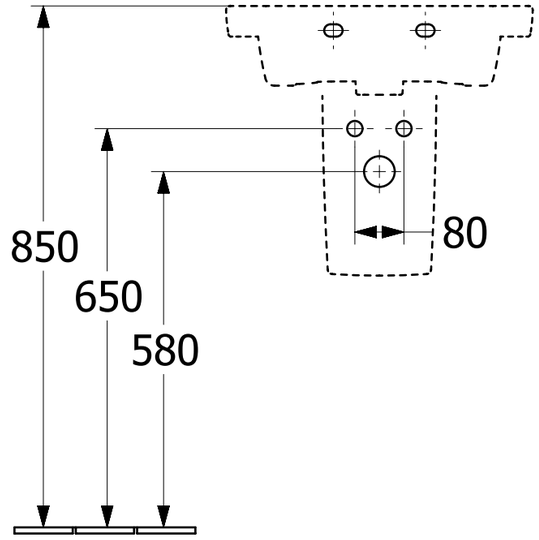

Subway 3.0 437050 437051 4370FF 4370FG	Villeroy & Boch 1748
V07 / 28.04.2021	